Code article: 01050

# QUEUE DE DEMOULAGE

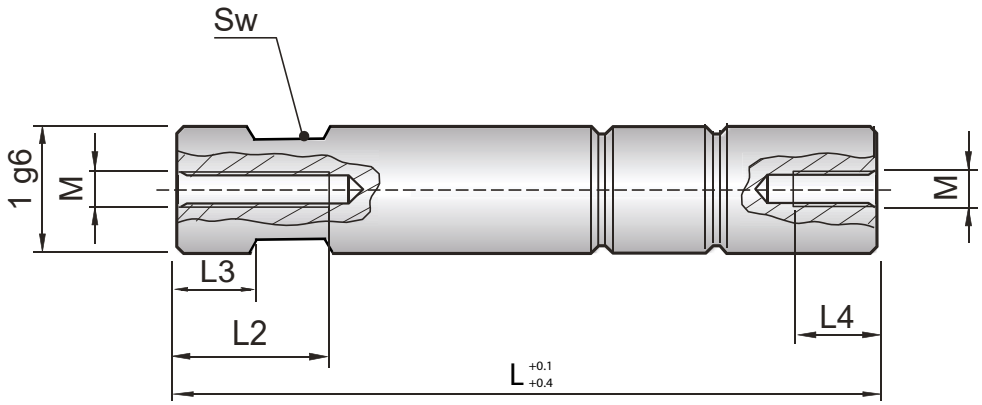


## REF: M1050 - D - L

Matière: 1.7131 - Dureté: 61-63
HRC Interchangeable avec E1050

| D1 | L | L2 | L3 | L4 | M | SW |
|---|---|---|---|---|---|---|
| 14 | 60 | 25 | 14 | 17 | M8 | 12 |
| | 70 | | | | | |
| | 80 | | | | | |
| | 100 | | | | | |
| | 120 | | | | | |
| | 140 | | | | | |
| | 160 | | | | | |
| | 180 | | | | | |
| 18 | 100 | 30 | 16 | 20 | M101 | 4 |
| | 120 | | | | | |
| | 140 | | | | | |
| | 160 | | | | | |
| | 180 | | | | | |
| | 200 | | | | | |
| | 220 | | | | | |
| | 240 | | | | | |
| 20 | 100 | 30 | 18 | 20 | M121 | 7 |
| | 120 | | | | | |
| | 140 | | | | | |
| | 160 | | | | | |
| | 180 | | | | | |
| | 200 | | | | | |
| | 220 | | | | | |
| | 240 | | | | | |
| 24 | 120 | 35 | 22 | 25 | M121 | 9 |
| | 140 | | | | | |
| | 160 | | | | | |
| | 180 | | | | | |
| | 200 | | | | | |
| | 240 | | | | | |
| 30 | 180 | 45 | 28 | 30 | M162 | 4 |
| | 220 | | | | | |
| | 260 | | | | | |
| | 300 | | | | | |
| 40 | 160 | 55 | 36 | 35 | M203 | 6 |
| | 180 | | | | | |
| | 200 | | | | | |

| D1 | L | L2 | L3 | L4 | M | SW |
|---|---|---|---|---|---|---|
| 40 | 220 | 55 | 36 | 35 | M203 | 6 |
| | 240 | | | | | |
| | 260 | | | | | |
| | 300 | | | | | |
| | 340 | | | | | |
| | 380 | | | | | |